AEROFLEX WEINSCHEL

Model 75A
Medium Power Fixed Coaxial Attenuator

dc to 42.0 GHz
5 Watts

Bi-directional Design

Features

- **Compact Construction -** Lowest size/power ratio.
- **Precision injection molded connector dielectric.**
- **Designed to meet environmental requirements of MIL-DTL-3933.**
- **Flat Response.**

Specifications

NOMINAL IMPEDANCE: 50 Ω

FREQUENCY RANGE: dc to 42.0 GHz

MAXIMUM DEVIATION OVER FREQUENCY:

Nominal ATTN (dB)	Deviation (dB) dc-26.5 GHz	26.5-40 GHz
3	± 0.50	± 1.00
6, 10, 20, 30	± 0.80	± 1.50

MAXIMUM SWR:

Frequency (GHz)	SWR
dc - 26.5	1.25
26.5 - 42	1.45

POWER RATING (mounted horizontally): 5 watts **average (bi-directional)** to 25°C ambient temperature, derated linearly to 0.5 Watt @ 125°C. 200 watts **peak** (5 µsec pulse width; 1.25% duty cycle).

POWER COEFFICIENT: <0.002 dB/dB/watt

TEMPERATURE COEFFICIENT: <0.0004 dB/dB/°C

TEMPERATURE RANGE: -55 °C to 125 °C

TEST DATA SUPPLIED: Sweep SWR/Attenuation data/plots performed across 0.1-40 GHz frequency range.

CONNECTORS: 2.92mm (Male/Female) connectors - mate nondestructively with SMA per MIL-C-39012, 3.5mm and other 2.92mm connectors.

Connector Options	Type/Description
1	2.92mm, Female
2	2.92mm, Male

CONSTRUCTION: Black, finned aluminum body, gold plated beryllium copper contacts.

WEIGHT: 200 g (7.0 oz.) maximum

PHYSICAL DIMENSIONS:

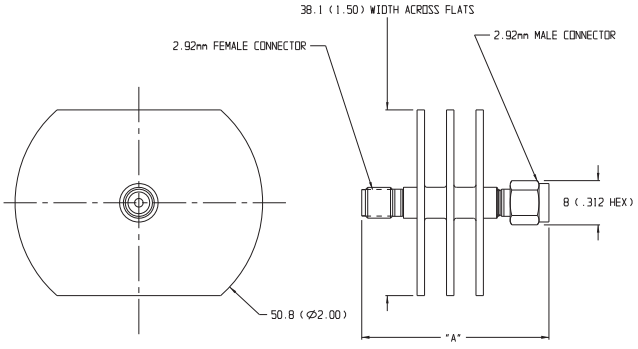

Dash No.	Connector Type	DIM A
11	2.92mm Female/Female	39.9 (1.56)
12	2.92mm Male/Female	44.1 (1.74)
22	2.92mm Male/Male	48.8 (1.92)

NOTE: All dimensions are given in mm (inches) and are nominal, unless otherwise specified.

MODEL NUMBER DESCRIPTION:

Example:

75A - XX - XX*

- 75A: Basic Model Number
- XX: Attenuation Value (dB)
- XX*: Connector Options
  - -11 Female/Female
  - -12 Female/Male
  - -22 Male\Male

*Unit is bi-directional and full power may be applied to either connector.

5305 Spectrum Drive, Frederick, MD 21703-7362 • TEL: 301-846-9222, 800-638-2048 • Fax: 301-846-9116
web: www.aeroflex.com/weinschel • email: weinschel-sales@aeroflex.com

Revision Date: 1/18/10